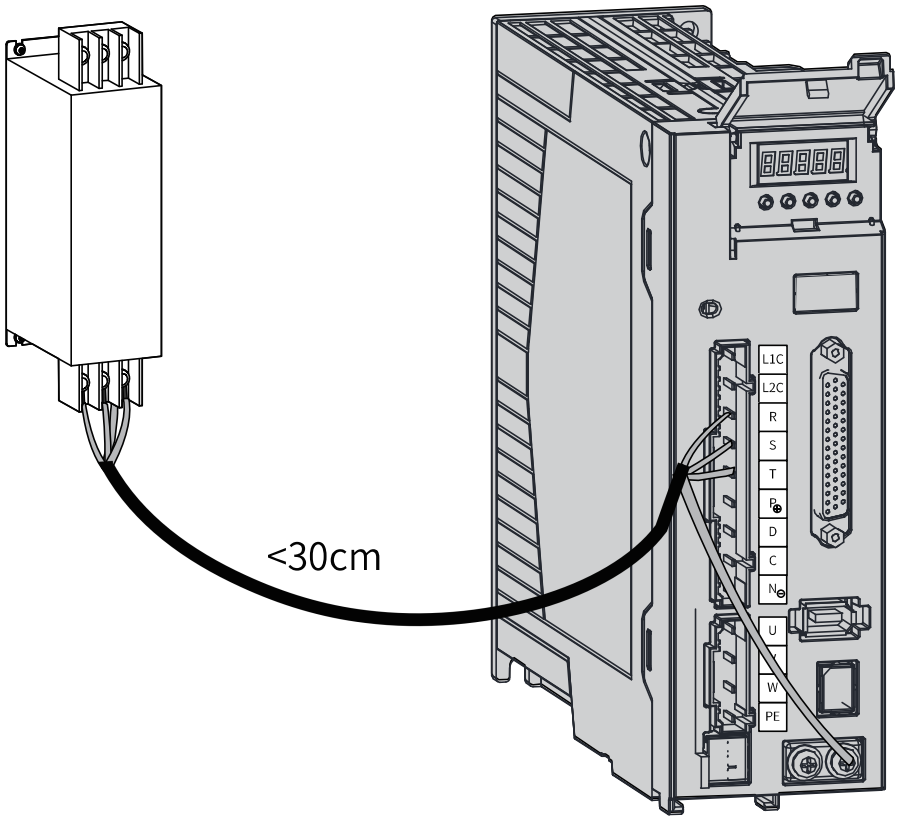

Figure 4-16 Installing the filter

4.2.7 Wiring of the Power Supply

- Single-phase 220 V models: SV660PS1R6I, SV660PS2R8I, SV660PS5R5I, SV660PS7R6I and SV660PS012I

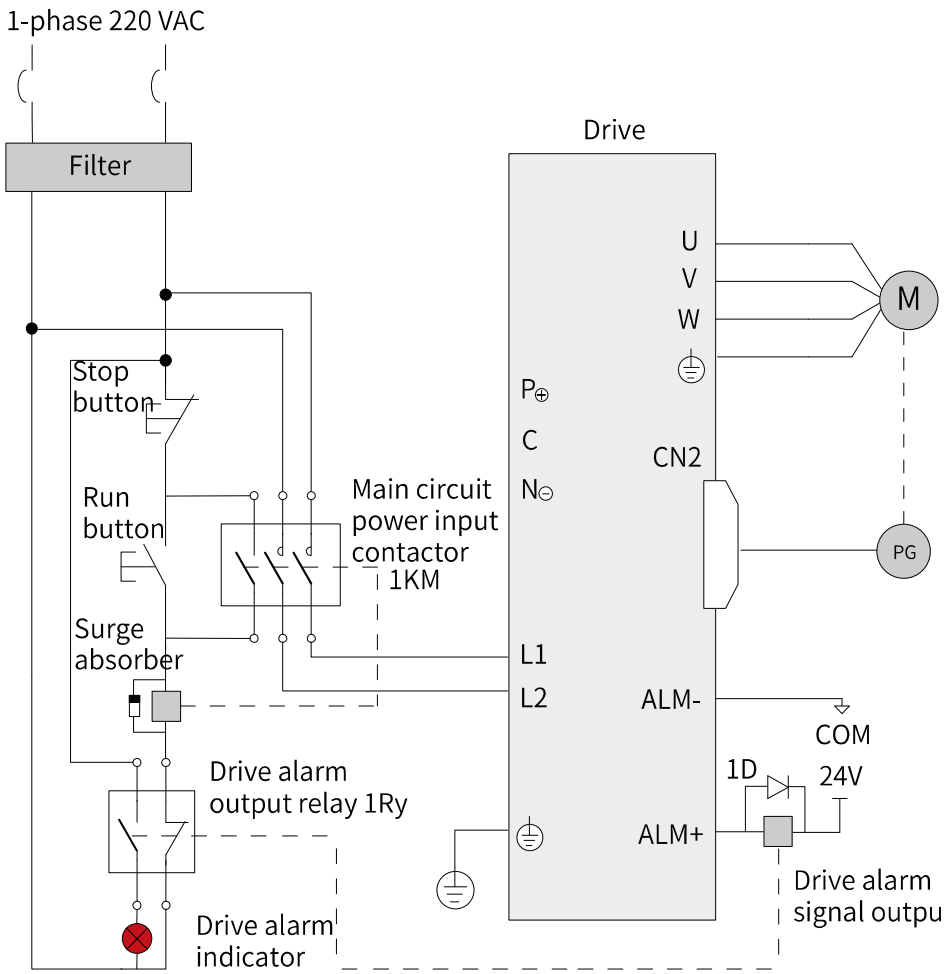

Figure 4-17 Main circuit wiring

Note

- 1KM: Electromagnetic contactor; 1Ry: Relay; 1D: Flywheel diode
- DO is set as alarm output (ALM+/-). When the servo drive alarms, the power supply will be cut off automatically. SV660PS1R6I and SV660PS2R8I are not configured with built-in regenerative resistors, if the regenerative resistor is needed, connect an external regenerative resistor between P⊕ and C.

- Three-phase 220 V models: SV660PS7R6I, SV660PS012I

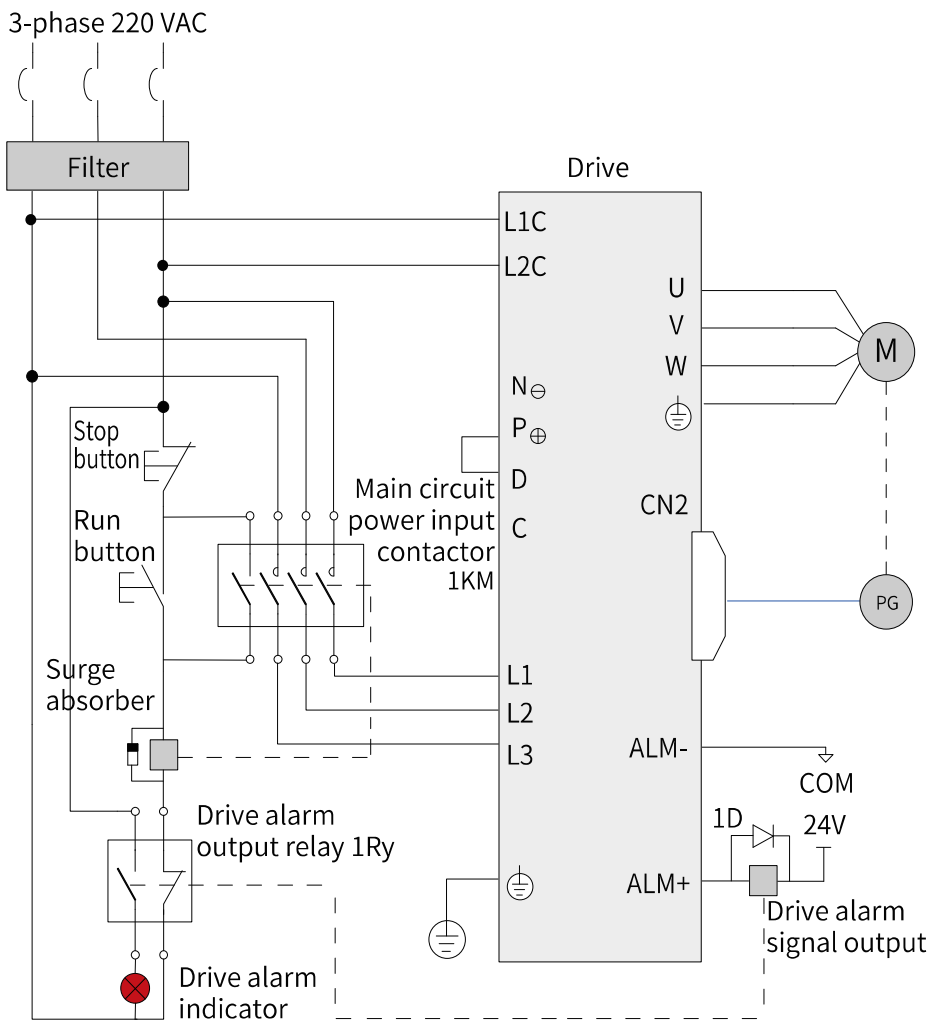

Figure 4-18 Main circuit wiring of three-phase 220 V models

Note

- 1KM: Electromagnetic contactor; 1Ry: Relay; 1D: Flywheel diode
- The DO is set as alarm output (ALM+/-). When the servo drive alarms, the power supply is cut off automatically and the alarm indicator lights up.

- Three-phase 380 V models: SV660PT3R5I, SV660PT5R4I, SV660PT8R4I, SV660PT012I, SV660PT021I, SV660PT026I

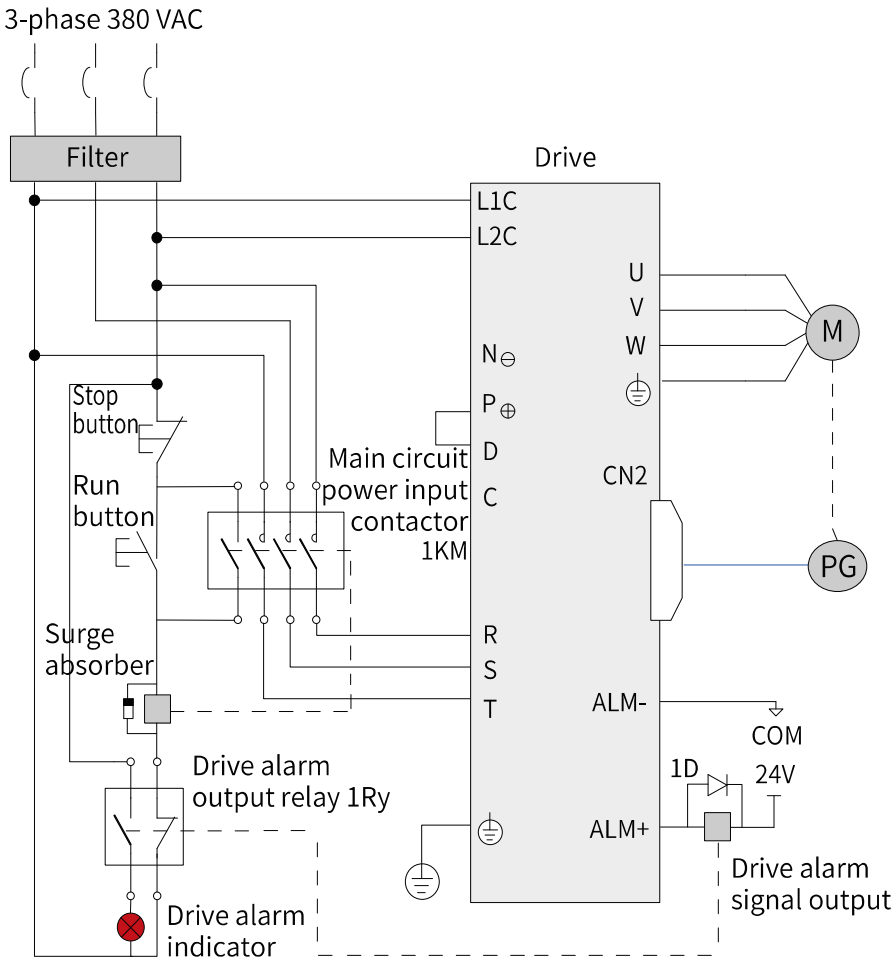

Figure 4-19 Main circuit wiring of three-phase 380 V models

Note

- 1KM: Electromagnetic contactor; 1Ry: Relay; 1D: Flywheel diode
- The DO is set as alarm output (ALM+/-). When the servo drive alarms, the power supply is cut off automatically and the alarm indicator lights up.

4.2.8 Grounding and Wiring

Observe the following requirements to ensure a proper grounding of the servo drive.